CAL-EDGE-8

CAL-EDGE-8

Address: Dolenjska cesta 83

1000 Ljubljana

CALMS	Project: CAL-EDGE-8	Cover page	Drawing no.: 22.04.2025		Created by: N.Pavlovska	Revision: 0	Sheet: 1
			Date: 22.04.2025	Function:	Location:	Revision date:	Next sheet: 2

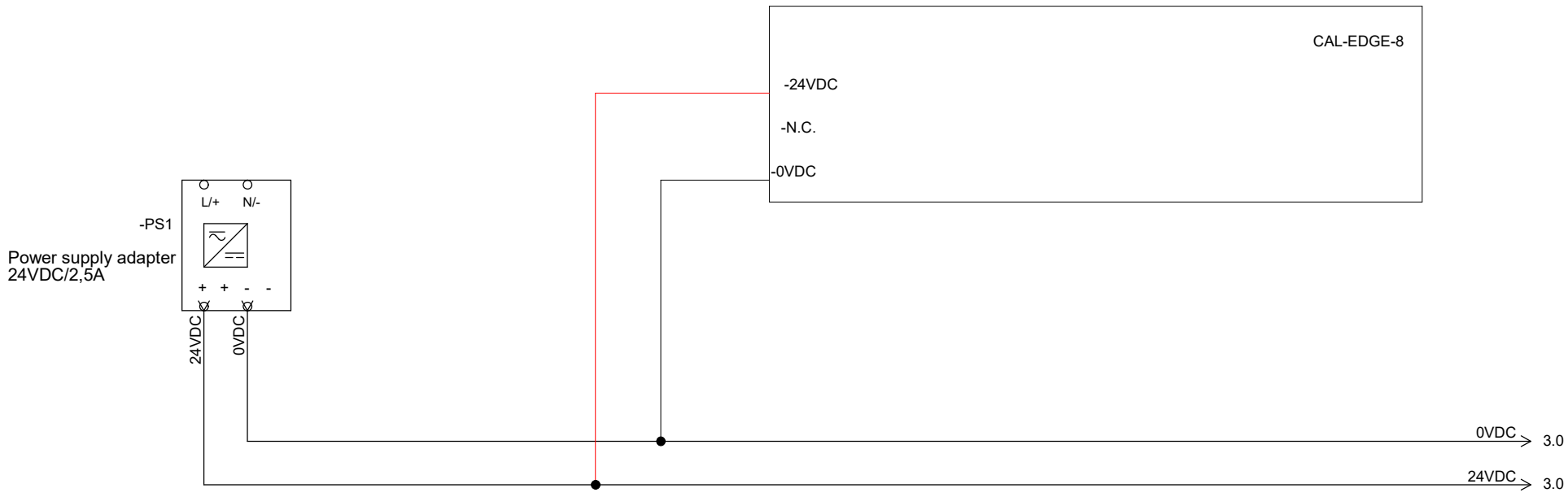

NOTE:

Voltage used for power supply is also used to supply sensprs through connectors!

CALMS	Project: CAL-EDGE-8	Main power supply	Drawing no.: CAL-EDGE-8	Created by: N. Pavlovska	Revision: 0	Sheet: 2
			Date: 22.04.2025 / Function:	Location:	Revision date:	Next sheet: 3

CAL-EDGE-8

Open-end connection wiring:
- brown wire = 24VDC
- white wire = 0VDC
- yellow wire = 4-20mA signal
- green wire = n.c.

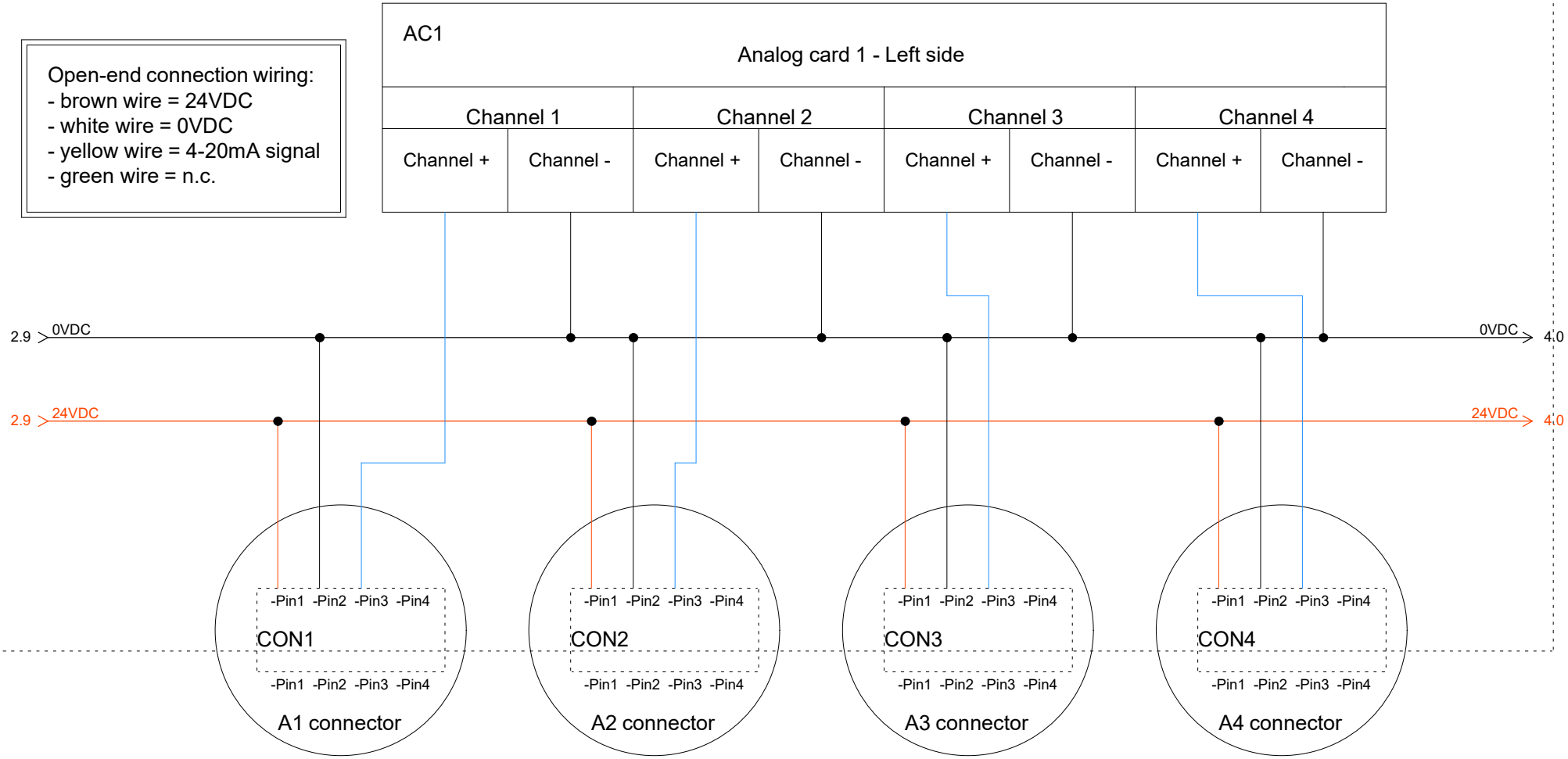

All AI connectors are attached to CAL-EDGE-8 enclosure.
Improper connection can damage the CAL-EDGE-8 device!

CALMS	Project: CAL-EDGE-8	Analog inputs 1	Drawing no.:	Created by: N. Pavlovska	Revision: 0	Sheet: 3
			Date: 22.04.2025 / Function:	Location:	Revision date:	Next sheet: 4

CAL-EDGE-8

Open-end connection wiring:
- brown wire = 24VDC
- white wire = 0VDC
- yellow wire = 4-20mA signal
- green wire = n.c.

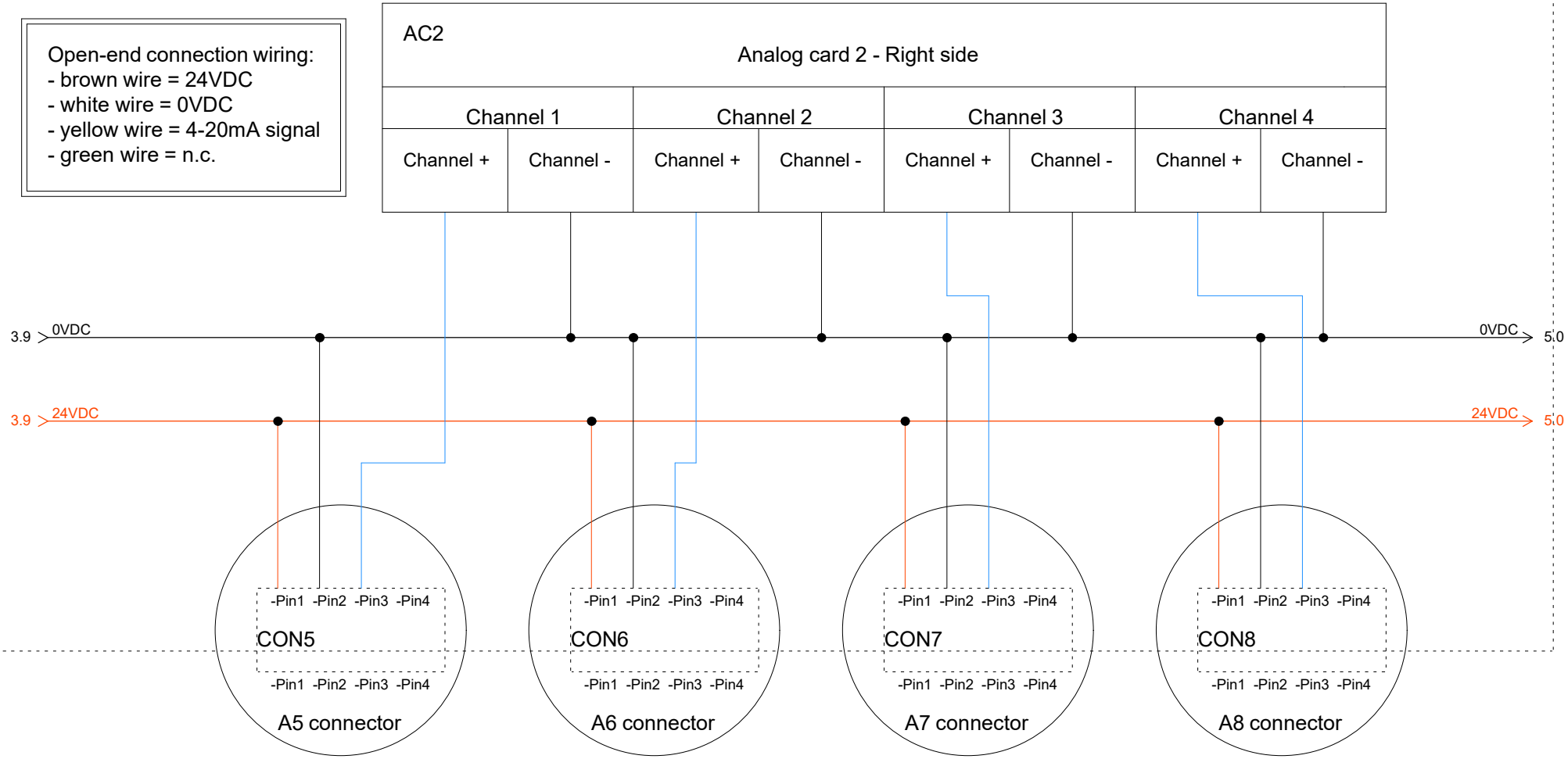

All AI connectors are attached to CAL-EDGE-8 enclosure.
Improper connection can damage the CAL-EDGE-8 device!

CALMS	Project: CAL-EDGE-8	Analog inputs 2	Drawing no.:	Created by: N. Pavlovska	Revision: 0	Sheet: 4
			Date: 22.04.2025 / Function:	Location:	Revision date:	Next sheet: 5

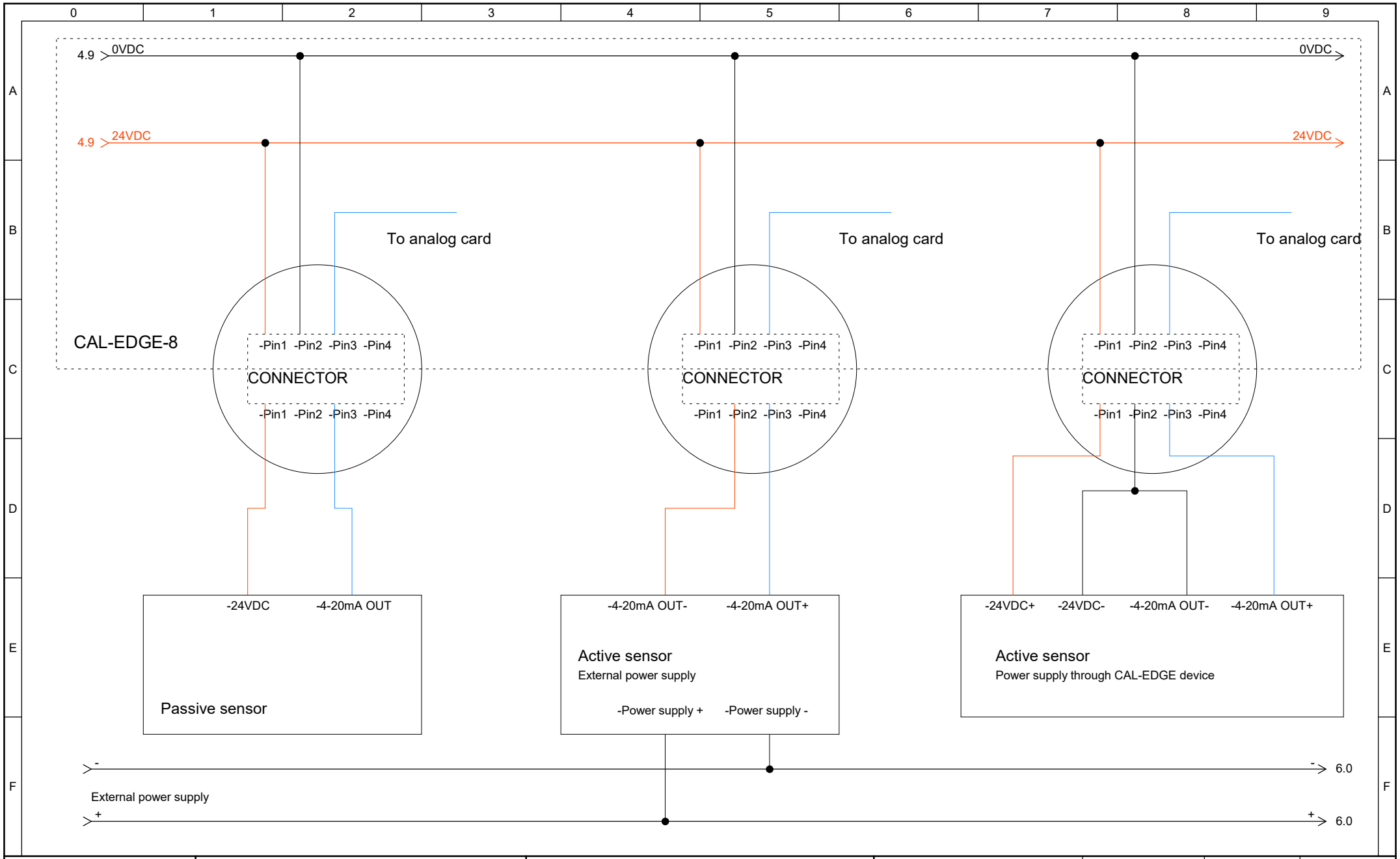

CALMS	Project: CAL-EDGE-8	Passive and active sensor wiring	Drawing no.: CAL-EDGE-8	Created by: N. Pavlovska	Revision: 0	Sheet: 5
			Date: 22.04.2025 / Function:	Location:	Revision date:	Next sheet: 6

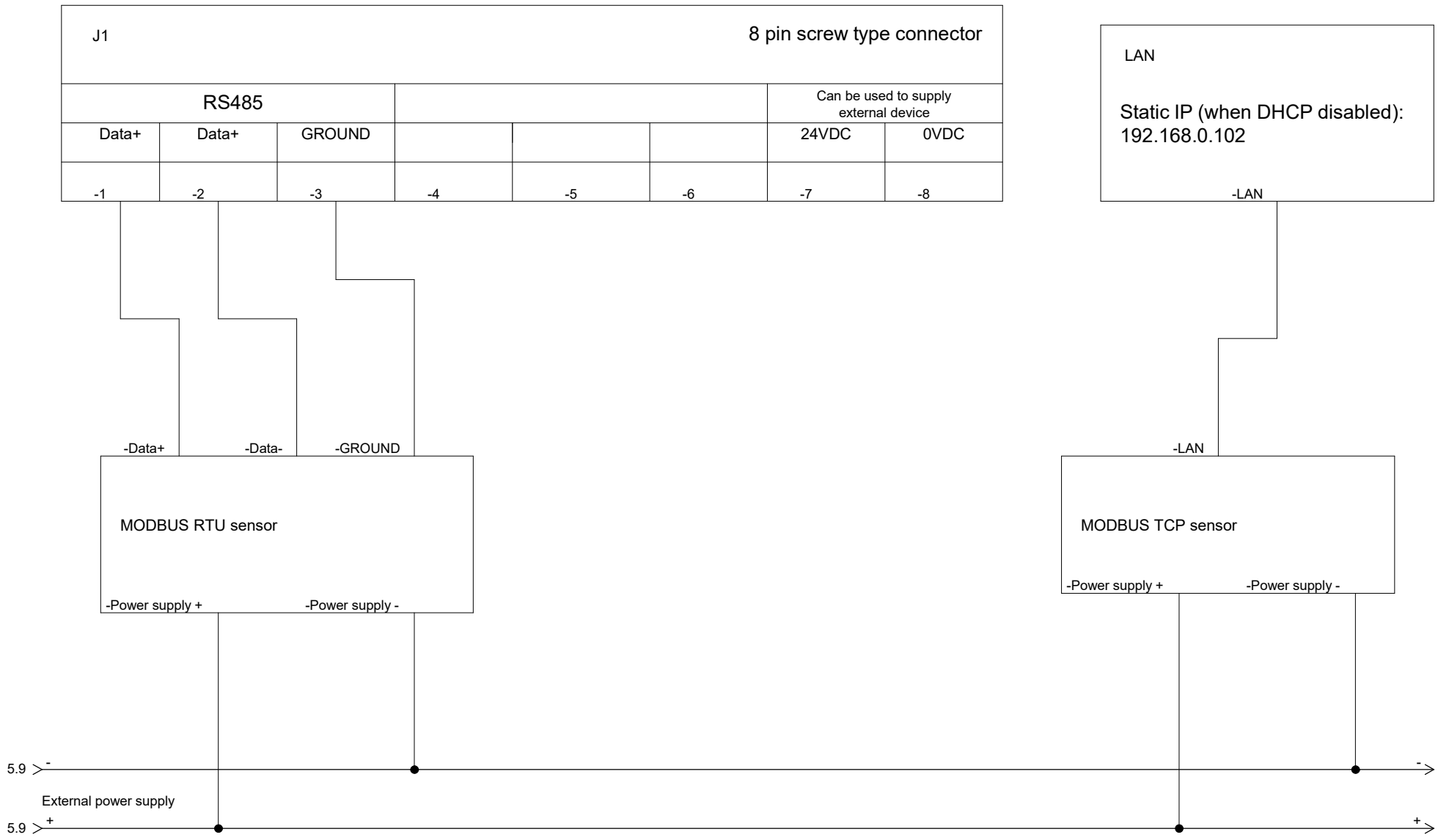

CALMS	Project: CAL-EDGE-8	J1 connector and LAN	Drawing no.: CAL-EDGE-8	Created by: N. Pavlovska	Revision: 0	Sheet: 6
			Date: 22.04.2025	Function:	Location:	Revision date:	Next sheet: